VXQF 405-4(Rev.1)

| NO. | PART NO. | DESCRIPTION | Q'TY |
|---|---|---|---|
| 02 | END CAP | ALUMINUM | 2EA |

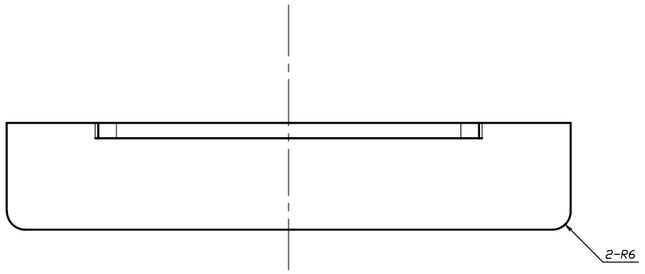


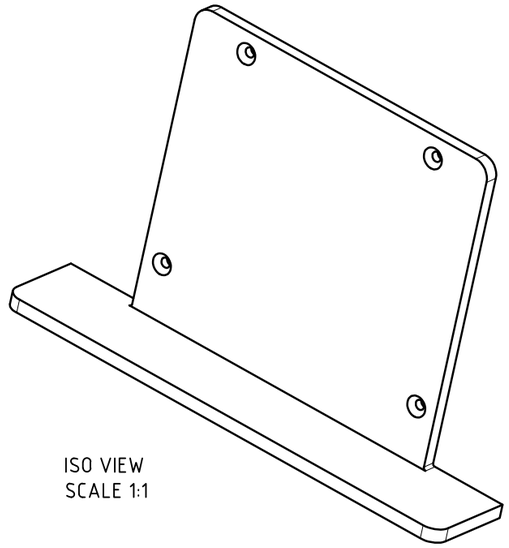

ISO VIEW
SCALE 1:1

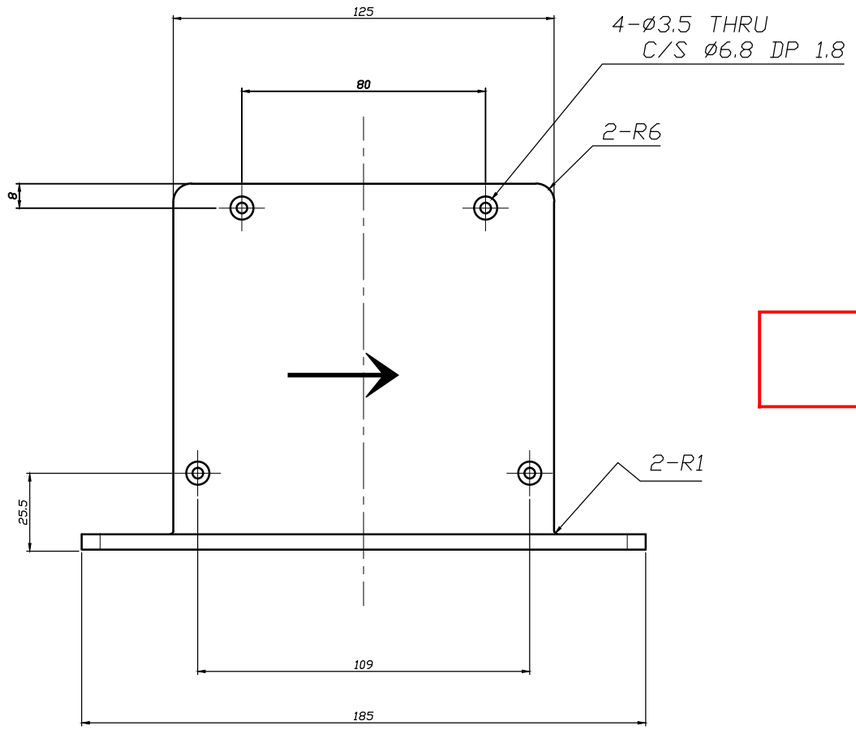


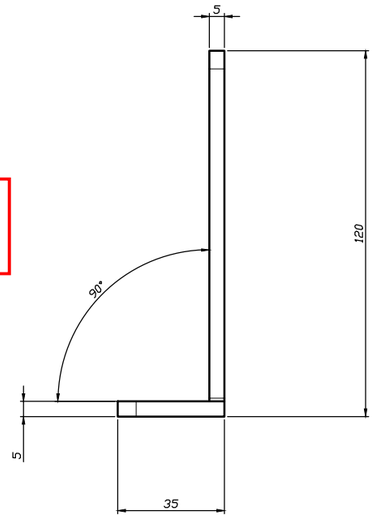


| | | | |
|---|---|---|---|
| 02 | | | |
| 01 | | . | |
| REV. | ZONE | REVISION RECORD | |
| ANGLE | | | |
| UNIT | mm | SCALE | 1:1 |
| SHEET | 1/1 | REV | P1 |
| Q'ty | 1 | SIZE | A1 |
| DESIGN : K.J.H | | DATE 14.03.06 | |
| CHECKED : M.Y.H | | DATE | |
| APPROVAL: J.S.M | | DATE | |
| WEIGHT : - g | | | |
| FINISH : 별도표기 | | | |
| MATERIAL : ALUMINUM 5T | | | |
| CODE NO. : 0000 | | | |
| PART NAME : END CAP | | | |
| MODEL NAME : PX36 EXTRUSION | | | |

FIRETECH
BY HIVIZ LED LIGHTING